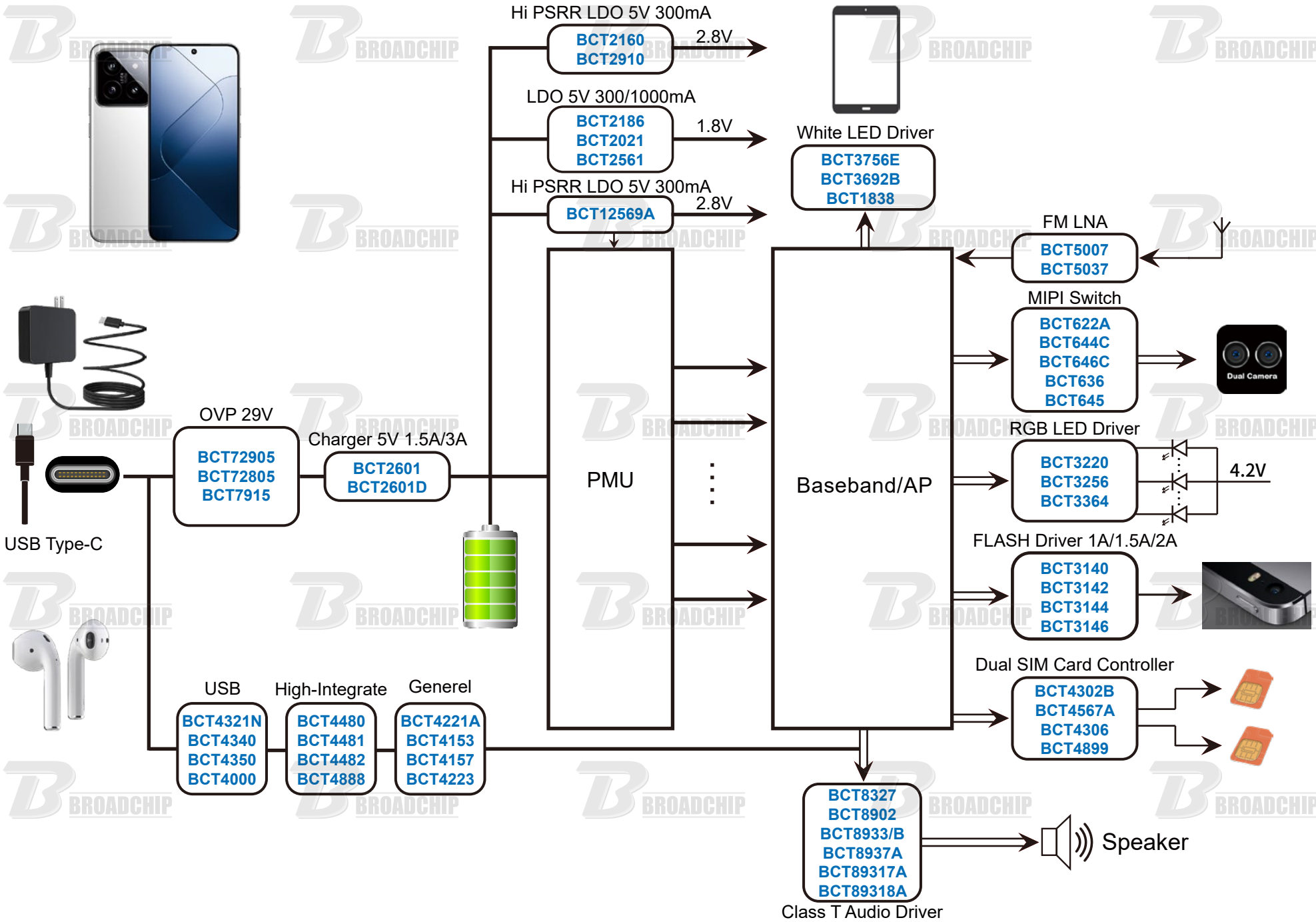Smart Phone Solution